FLEX CTC

CONTINUOUS TABLET COATER

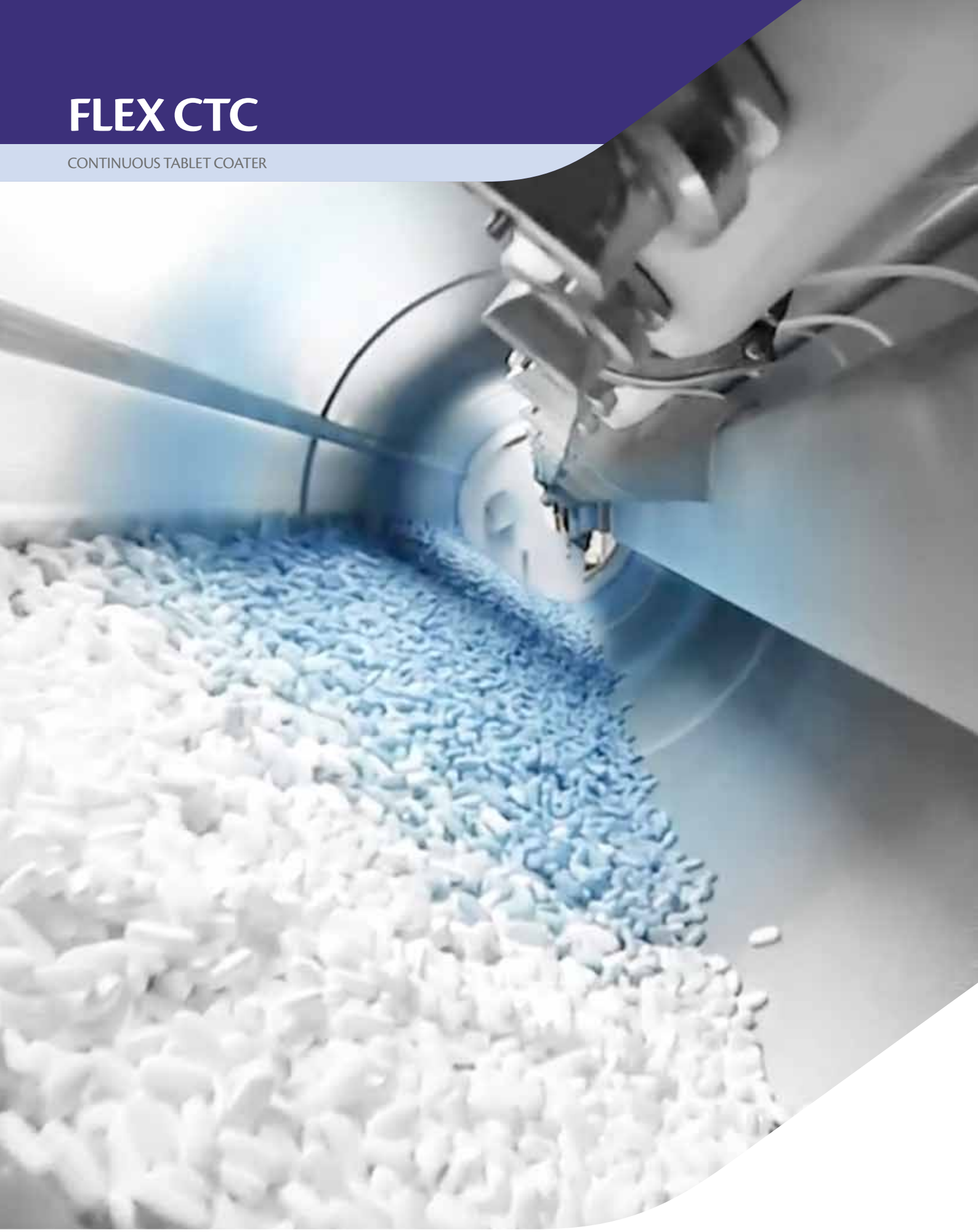

Thomas

an IMA Group Company

FLEX CTC

CONTINUOUS TABLET COATING SYSTEM

The Thomas Processing LLC FLEX CTC Continuous Tablet Coater extends our film coating technology from the typical batch process to a fast and efficient continuous process. Featuring 22 spray nozzles and our proven ACCELA COTA technology in a 24-inch diameter (610 mm) fully perforated drum, the FLEX CTC achieves the same high performance demonstrated in our batch coaters but in much less time. It also offers the industry's leading product volume flexibility of 100 to 1,500+ kg/hr. Complete system automation is available with our industry-leading Thomas Processing LLC COMPU-COAT control software, providing total process control, repeatability and validation documentation.

SUITABLE FOR CLEAR COATING, COLOUR COATING AND ENTERIC COATING OF TABLETS AND SOFT GELS

Automatic in-feed gently introduces tablets to the bed on a steady basis, weight belt interface permits tablet loading automation with COMPU-COAT controls. Our Individual Gun Sequencing System ensures zero product loss and zero re-processing during start-up and shut-down. The long, shallow bed (5-6 inches) and 22 spray nozzles translate into an increased number of passes through the spray zone for every tablet, ensuring excellent tablet uniformity. The low residence time and shallow tablet bed means minimal tablet erosion and minimal heat exposure. The FLEX CTC, like all of our FLEX Series coaters, is designed for complete access and cleanability.

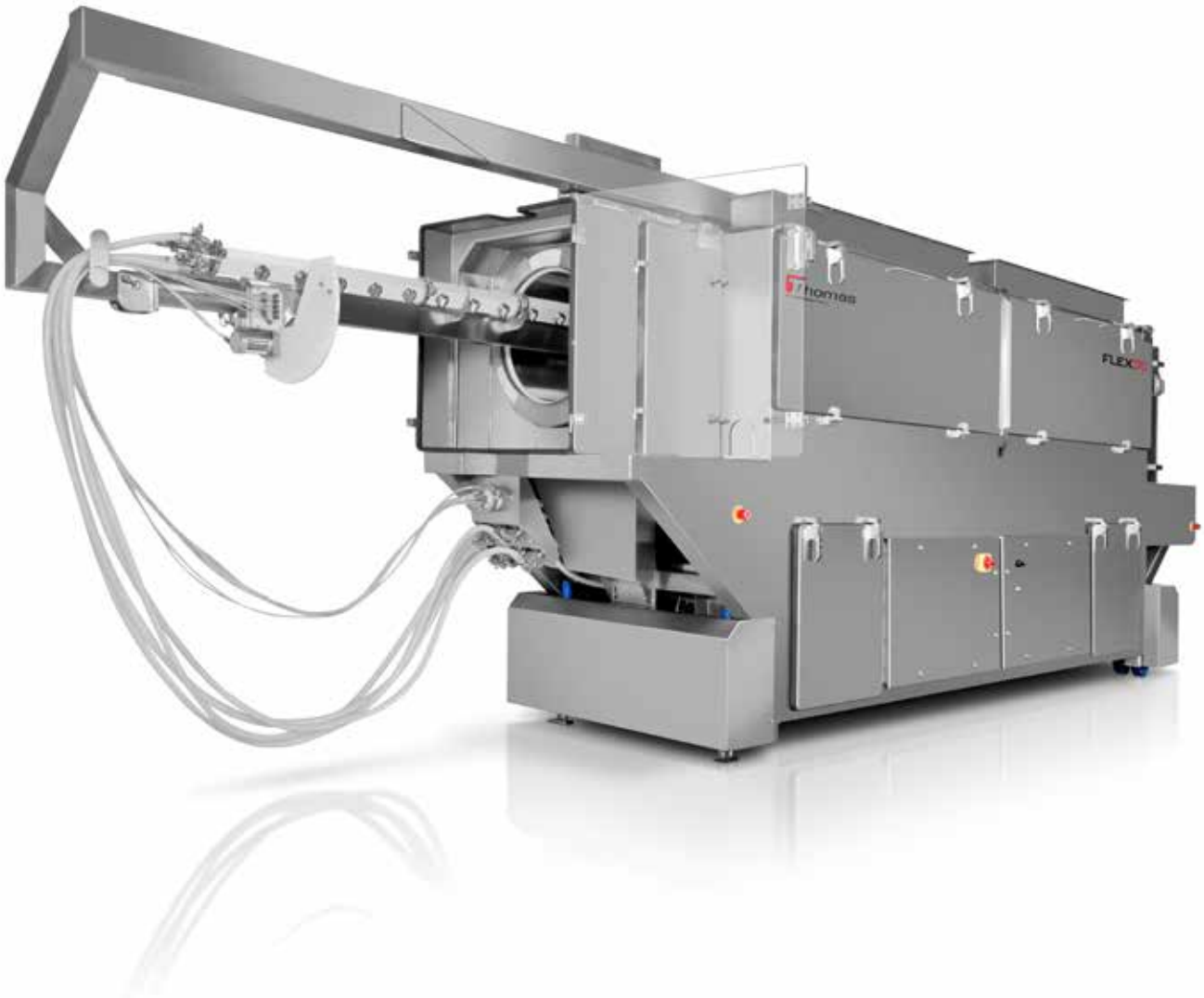

TECHNICAL DATA

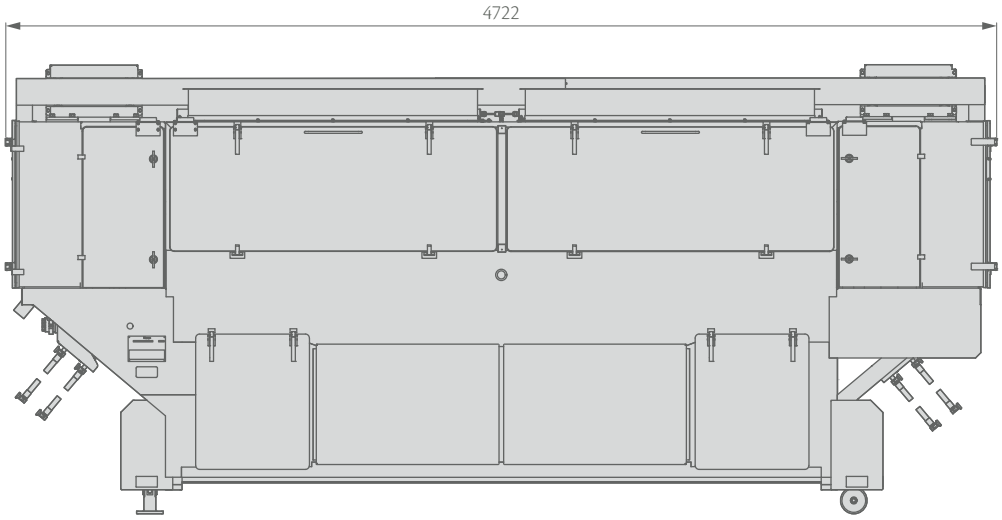

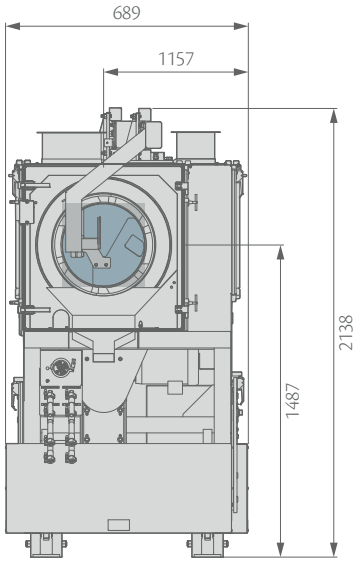

MODEL	**FLEX CTC**
Throughput	100 - 1,500+ kg/hr. (depending on weight gain)
Spray Guns	22 guns on two separate manifolds (11 per manifold)
Air flow Ranges	up to 10,000 cfm [17,000 m^3/hr]
Wash-In-Place System	12 nozzles, 2 to 7 gpm per nozzle; 2-zone valves
Pan Dimensions	24" diameter x 160" long [610 mm x 4,064 mm]
Unit Dimensions	15'3" ft x 4'2" ft x 10'9" ft [4.57m x 1.21m x 3.04 m]
Controls	Thomas Processsing LLC Compu-Coat
Available Options	Solution Preparation & Wash-In-Place Systems Integration

THOMAS PROCESSING LLC
200 Airport Road
Elgin, IL · 60123 USA
Tel. +1 (847) 358-5800
www.thomasprocessing.com - www.ima.it

July 2022 - 990FLEXCTC01

THOMAS PROCESSING LLC reserves the right to make any changes to the described machine characteristics.